WIND TURBINE

4SUN-NE-300S-5 24V

Product code: W0003

300W
Rated power

5
Number of blades



FUNCTIONS

- Low start-up speed, high wind energy utilisation.
- Easy installation, optional connection pipe or flange connection optional.
- Optimised aerodynamic blade shape and structure to increase wind utilisation and annual energy production.
- Cast aluminium alloy body, with 2 swivel bearings, so it can withstand stronger winds and operate more safely.
- The turbine has a built-in magnetic brake, which effectively reduces torque at the limiting wind speed and influences the optimal generator operation.

TECHNICAL DATA

Model	Wind Turbine 4SUN-NE-300S-5 24V
Rated power	300W
Maximum power	330W
Rated voltage	24V
Take-off speed	1,5m/s
Rated wind speed	10m/s
Wind speed limit	45m/s
Rotor diameter	1,25m
Net weight	7,5kg
Number of blades	5
Blade material	nylon
Type of alternator	3-phase AC generator with neodymium permanent magnets (NdFeB), synchronous
Generator housing	aluminium alloy
Control system	Electromagnet
Working temperature	-40°C - 80°C
Design lifetime	20 years

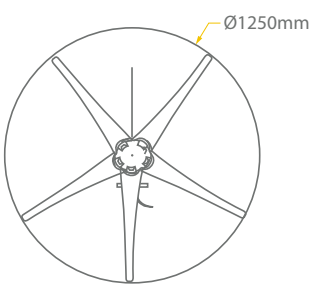

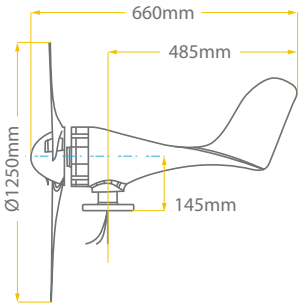

POWER CURVE

